DYP
Smart sensor

PRODUCT SPECIFICATION

A23 module
Product Model: DYP-A23-V1.0

https://dypsensor.en.alibaba.com.
Shenzhen Dianyingpu Technology Co., Ltd.

PRODUCT SPECIFICATION

CONTENT

1. Production introduction....1
1.1 Overview....1
1.2 Product features....1
1.3 Scope of application....1

2. Appearance description....1
2.1 Mechanical characteristics....1
2.2 Installation hole recommendations....2
2.3 Interface definition....2

3. Output description....3
3.1 UART controlled output....3
3.1.1 UART communication description....3
3.1.2 UART output format....3
3.1.3 UART output example....3

3.2 RS485 output description....4
3.2.1 RS485 interface parameters....4
3.2.2 RS485 interface protocol....4

3.3 Modbus protocol description....4
3.3.1 Modbus protocol parameters....4
3.3.2 Modbus protocol format....4
3.3.3 Modbus register....5
3.3.4 Modbus communication example....6

4. Module parameters....8
4.1 Basic parameters....8
4.2 Rated environmental conditions....9
4.3 Rated electrical condition....10

5. Module option description....11

6. Effective detection range reference chart....11

7. Matters needing attention....12

8. Packaging specifications....12

1. Product introduction

1.1 Overview

The A23-module is a high-performance ranging module designed using a closed split waterproof probe. The probe has an IP67 dustproof and waterproof rating and is suitable for use in wet and harsh measurement situations. The 4cm small blind zone is suitable for different detection conditions. It is a high-performance, high-reliability commercial-grade functional module with simple operation.

1.2 Product features

• 5V power supply

• 4cm small blind zone

• Closed split waterproof probe

• Strong anti-interference, stable and reliable data output

• Fast response time and high accuracy

• Operating temperature -15℃ to +60℃

• Storage temperature -25℃ to +70℃

• The closed split waterproof probe does not make distinctions and easy to install.

• Electrostatic protection design, the connection pins are equipped with electrostatic protection devices, complying with the IEC61000-4-2 standard

• The probe complies with IP67 (no impact in 1 meter water depth for 12 hours) protection level

1.3 Scope of application

• Horizontal ranging

• Parking management system

• Robot obstacle avoidance and automatic control

• Object proximity and presence awareness

2. Appearance description

2.1 Mechanical characteristics (unit: mm)

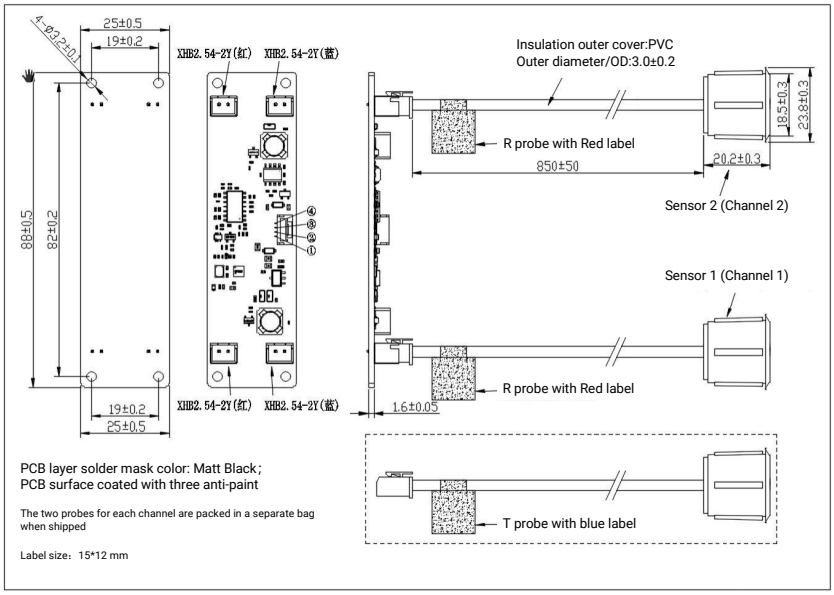

2.2 Installation hole recommendations(unit: mm)

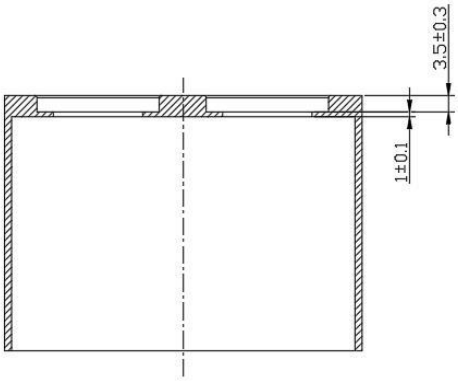

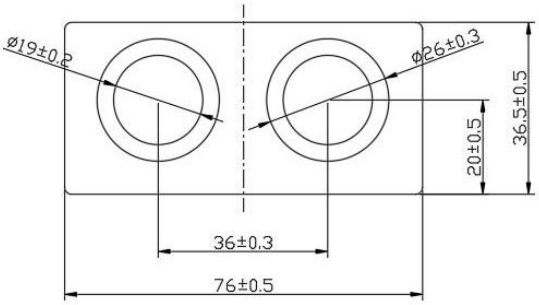

2.3 Interface definition

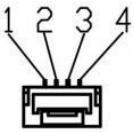

PIN	Lead name	Lead description	Remark
1	VCC	Power input pin	
2	GND	Power ground pin	
3	RX/B	UART trigger input lead/RS485 B line	
4	RX/A	UART communication output lead/RS485 line A	

3. Output description

3.1 UART controlled output

3.1.1 UART communication description

The module outputs 0xFFFD when no object is detected.

UART	data bits	Stop bit	parity check	baud rate
TTLLevel	8	1	none	115200bps

3.1.2 UART output format

Frame data	Description	Byte
Frame header	Fixed to 0XFF	1 byte
Data1_H	Channel 1 high 8 bits of distance data	1 byte
Data1_L	Channel 1 lower8 bits of distance data	1 byte
Data2_H	Channel 2 high 8 bits of distance data	1 byte
Data2_L	Channel 2 lower 8 bits of distance data	1 byte
SUM	Communication checksum	1 byte

3.1.3 UART output example

Frame header	Data1_H	Data1_L	Data2_H	Data2_L	SUM
0XFF	0x03	0xE8	0x05	0x43	0X32

Note: The checksum only retains the lower 8 bits of the accumulated value;

SUM = (Fr a me h e a d e r + Data1_H+Data1_L+Data2_H+Data2_L)&0x00FF
= (0XFF + 0x03 + 0xE8 + 0x05 + 0x43)&0x00FF
=0x32;

Channel 1 distance value= Data1_H * 256 + Data1_L
= 0X03E8
Converted to decimal equals 1000， The unit is mm, which means the current measured distance value is 1000mm;
Channel 2 distance value= Data2_H * 256 + Data2_L
= 0X0543
Converted to decimal equal to 1347, the unit is mm, indicating that the current measured distance value is 1347mm;

3.2 RS485 output description

3.2.1 RS485 interface parameters

Interface	Data bits	Stop bit	Parity check	Baud rate
RS485 level	8	1	None	115200bps(default)

3.2.2 RS485 interface protocol

To use Modbus protocol, please refer to the "Modbus Protocol Description" chapter.

3.3 Modbus protocol description

3.3.1 Modbus protocol parameters

Model	Check	Module address	Read function code	Write function code
Modbus-RTU	CRC-16/ MODBUS	Can be set, default 0x01	0x03	0x06

3.3.2 Modbus protocol format

The user computer is the host device, and this module is the slave device.
Host sends (read)：

Name	Device address	Function code 0x03	Register address	Registerquantity	CRC16check
length(Byte)	1	1	2	2	2

The slave responds（read）：

Name	Lead name	Lead name	Lead name	Lead name	Lead name
Length(Byte)	1	1	1	N	2

Host sends（write）：

Name	Device address	Function code 0x06	Register address	Data area	CRC16 check
Length(Byte)	1	1	2	2	2

The slave responds（write）：

Name	Device address	Function code 0x06	Register address	Data area	CRC16 check
Length(Byte)	1	1	2	2	2

3.3.3 Modbus register

（1）Modbus register table

Status	Register address	Register function	Date type	Instruction （for reference）
Only read	0x0100	Processing value	Unsigned int，16bit	After receiving the instruction, the distance measurement is started. After algorithm processing, the distance value is output, unit: mm, (response time 500`800ms)
Only read	0x0101	Real-time value	Unsigned int，16bit	After receiving the instruction, the module starts ranging once and outputs real-time distance value, unit: mm, response time 90~150ms)
Only read	0x0102	temperature	Unsigned int，16bit	Unit: 0.1℃, resolution: 0.5℃, response time about 20~80ms

Only read	0x0106	Trigger channel 1 work	Unsigned int，16bit	After the module receives the command, channel 1 starts ranging once and outputs a real-time distance value, unit: mm, response time 60~100ms)
Only read	0x0107	Trigger channel 2work	Unsigned int，16bit	After the module receives the command, channel 2 starts ranging once and outputs a real-time distance value, unit: mm, response time 60~100ms)
Only read	0x0127	Trigger channel 1 work	Unsigned int，16bit	After the module receives the command, channel 1 starts ranging once and outputs a real-time distance value, unit: us, response time 60~100ms)
Only read	0x0128	Trigger channel 2work	Unsigned int，16bit	After the module receives the command, channel 2 starts ranging once and outputs a real-time distance value, unit: us, response time 60~100ms)
Read-write	0x0200	slave address	Unsigned int，16bit	Range: 0x01～0xFE (default 0x01), 0xFF is the broadcast address
Read-write	0x0201	baud rate	Unsigned int，16bit	Default 0x09, 115200bps;0x02-4800, 0x03-9600,0x04-14400, 0x05-19200,0x06-38400, 0x07-57600,0x08-76800, 0x09-115200
Read-write	0x0208	Angle level	Unsigned int，16bit	The angle level can be set from 1 to 4. The larger the level, the larger the detection angle, the more sensitive the induction, and the higher the requirements for power supply ripple.

Remarks:

1. The register data is high byte first and low byte last.

2. The command reading time must be greater than the command response time to ensure complete transmission and reception of data frames.

（2）The impact of baud rate on single packet communication duration.

Number	Baud rate	Communication duration	Remark
1	4800	16ms	
2	9600	8ms	
3	14400	5.6ms	
4	19200	4ms	
5	38400	2.4ms	
6	57600	1.6ms	
7	76800	0.8ms	
8	115200	0.6ms	

Note: The higher the baud rate, the shorter the single packet communication time.

3.3.4 Modbus communication example

Example 1: Reading processing value data
Host：01 03 01 00 00 02 C5 F7
Slave ：01 03 04 02 F2 03 E8 5AC6
instruction：The sensor address is 0x01, and the channel 1 processing distance value is 0x02F2, which is 754mm when converted to decimal. Channel 2 processes a distance value of 0x03E8, which is converted to decimal 1000mm.

Example 2: Reading real-time value data
Host：01 03 01 01 00 02 94 37
Slave：01 03 04 02 F2 03 E8 5AC6
instruction：The sensor address is 0x01, and the channel 1 processing distance value is 0x02F2, which is 754mm when converted to decimal. Channel 2 processes a distance value of 0x03E8, which is converted to decimal 1000mm.

Example 3: Read channel 1 real-time value data
Host：01 03 01 06 00 01 65 F7
Slave：01 03 02 02 F2 38 A1
instruction: The sensor address is 0x01, the channel 1 processing distance value is 0x02F2, which converted to decimal is 754mm.

Example 4: Read channel 2 real-time value data
Host：01 03 01 07 00 01 34 37
Slave：01 03 02 03 E8 B8 FA
instruction：The sensor address is 0x01, and the channel 2 processing distance value is 0x03E8, which is converted to decimal 1000m.

Example 5: Modify baud rate
Host：01 06 02 01 00 02 58 73
Slave：01 06 02 01 00 02 58 73
instruction：The module address is 0x01 and the baud rate is modified to 0x02, which is 4800bps.

Example 6: Modify angle level
Host：01 06 02 08 00 01 C8 70
Slave：01 06 02 08 00 01 C8 70
instruction：The module address is 0x01 and the angle is modified to level 1.

4. Module parameters

4.1 Basic parameters

Parameter item	Specification Value	Unit	Remark
Operating Voltage	5	V	DC
Average working current	≤20	mA	(1)
Peak current	≤40	mA	
Blind zone distance	≤4	cm	
Plane object range	4～200	cm	(2)

Response time	≥30	ms	(3)
Output method	UART Controlled,RS485	-	
Measurement accuracy	±(1+S*0.5%)	cm	(2)
Temperature compensation	compensation	-	
Reference angle	60±15	°	(4)

Remark:

(1)Typical data obtained by testing at a temperature of 25°C, a humidity of 65% RH, a power supply of 5V, and a working cycle of approximately 80ms;

(2)The temperature is 25℃, the humidity is 65% RH, and the measured object is a 50cm×60cm flat carton. The transducer must be as vertical as possible to the measured object, with the front end of the shell as the starting point. S represents the measurement distance;

(3) Determined by the distance of the measured object, the farther the distance of the measured object, the longer the working cycle;

(4) Reference data obtained when the temperature is 25℃, the humidity is 65% RH, and the measured object is a φ75mm high 1000mm PVC pipe at a distance of 50cm;

4.2 Rated environmental conditions

Item	Minimum value	Typical value	Maximum value	Unit	Remark
Storage temperature	-25	25	70	℃	
Storage humidity		65%	95%	RH	（1）
Operating temperature	-15	25	60	℃	
Operating humidity		65%	95%	RH	（1）

Remarks:

(1) a. When the ambient temperature is -25~60℃, the maximum humidity is 95% (no condensation);

b. When the ambient temperature is between 40 and 50°C, the highest humidity is the highest humidity in nature at the current temperature (no condensation)

4.3 Rated electrical condition

Parameter item	Specification			Unit	Remark
	Minimum value	Typical value	Maximum value		
Operatingvoltage	4.75	5	5.25	V	
Peak current			40	mA	Vpp
Input ripple			50	mV	Vpp
Input noise			100	mV	Vpp
ESD			±4K/±8K	V	（1）

Remarks: (1) The connecting leads and pins comply with IEC61000-4-2 standards;

5. Module option description

A23-module has 2 different output formats, and does not support modification after factory default configuration. Users can choose the corresponding model according to actual application needs.

Name	Product number	Communication output method	Remark
A23-model	DYP-A23YYTW-V1.0	UART Controlled	
	DYP-A23YY4W-V1.0	RS485	

6. Effective detection range reference chart

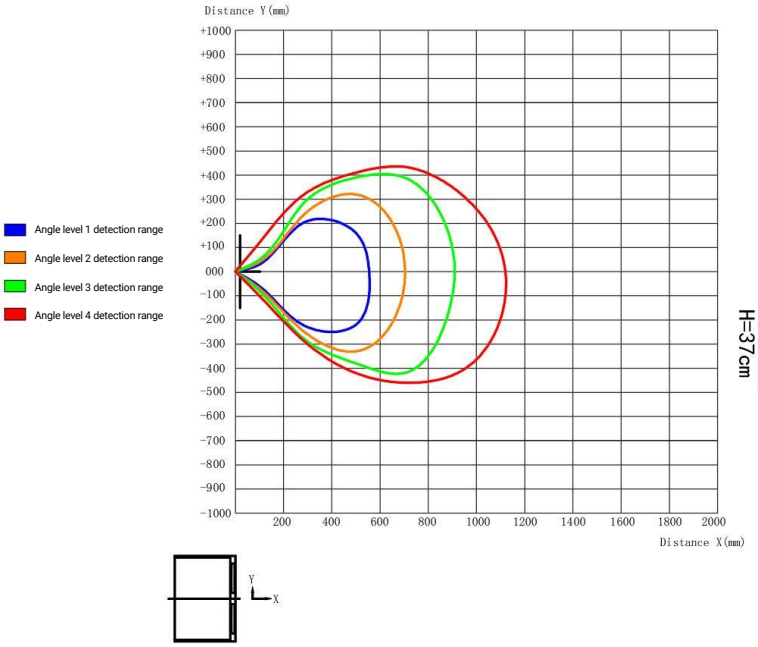

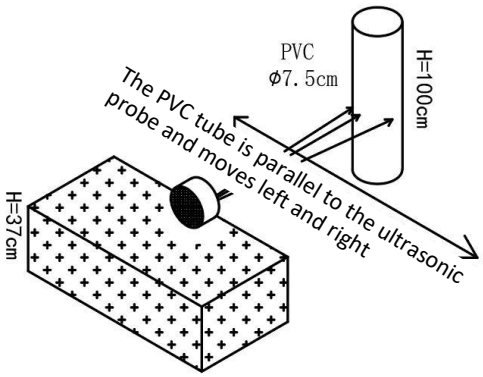

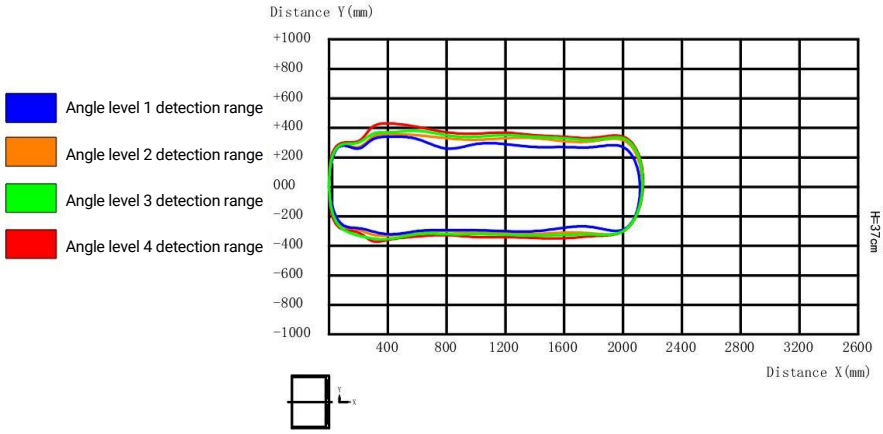

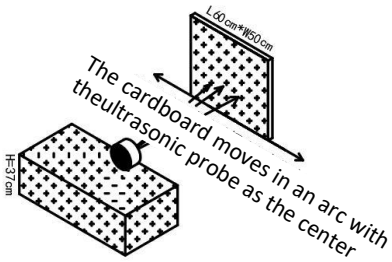

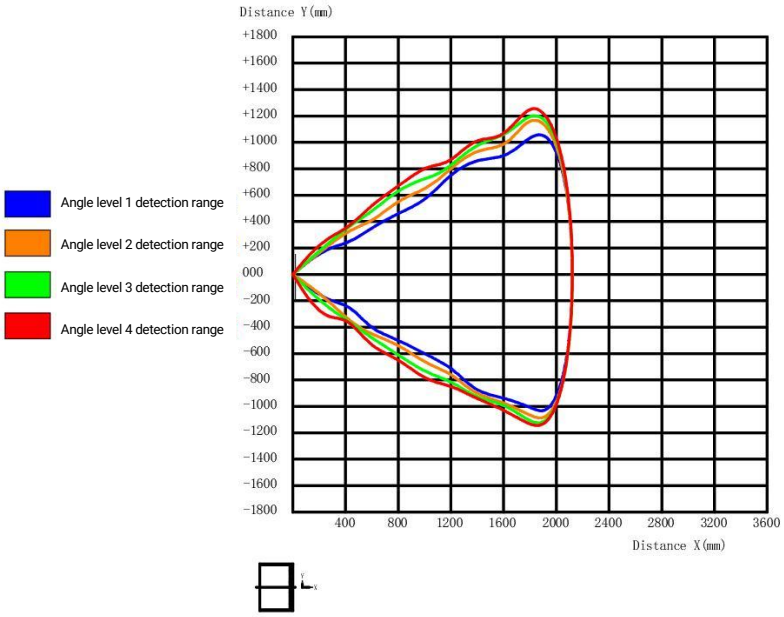

The cardboard moves in an arc with theultrasonic probe as the center

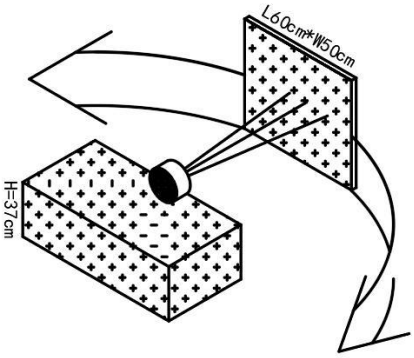

7.Matters needing attention

1. The company reserves the right to change this document and update functions without prior notice;

2. Please pay attention to structural tolerances when designing. Unreasonable structural design may cause temporary module functional abnormalities;

3. Please pay attention to electromagnetic compatibility evaluation when designing. Unreasonable system design may cause module functional abnormalities;

4. When it comes to boundary applications of product limit parameters, you can contact our FAE to confirm the relevant precautions;

5. The response time and co-channel interference of this product are configured in common scenarios and can be improved in special scenarios. You can contact our FAE to communicate related matters.

8.Packaging specifications

1. The default is Dianyingpu’s conventional packaging method;

2. Packaging materials can be customized according to customer IQC related standards;

3. The container transportation method must adopt a staggered LCL method, and the outer edge of the single stack must be wrapped with film and reinforced gussets to provide sufficient support.